EMU Black V2 Wiring Example: Wiring Diagram for 4-Cylinder Engine with DBW and Dual VVT Camshafts

This is a wiring example. Different pins may need to be used in your specific case. Check the device pinout for more information about each pin.

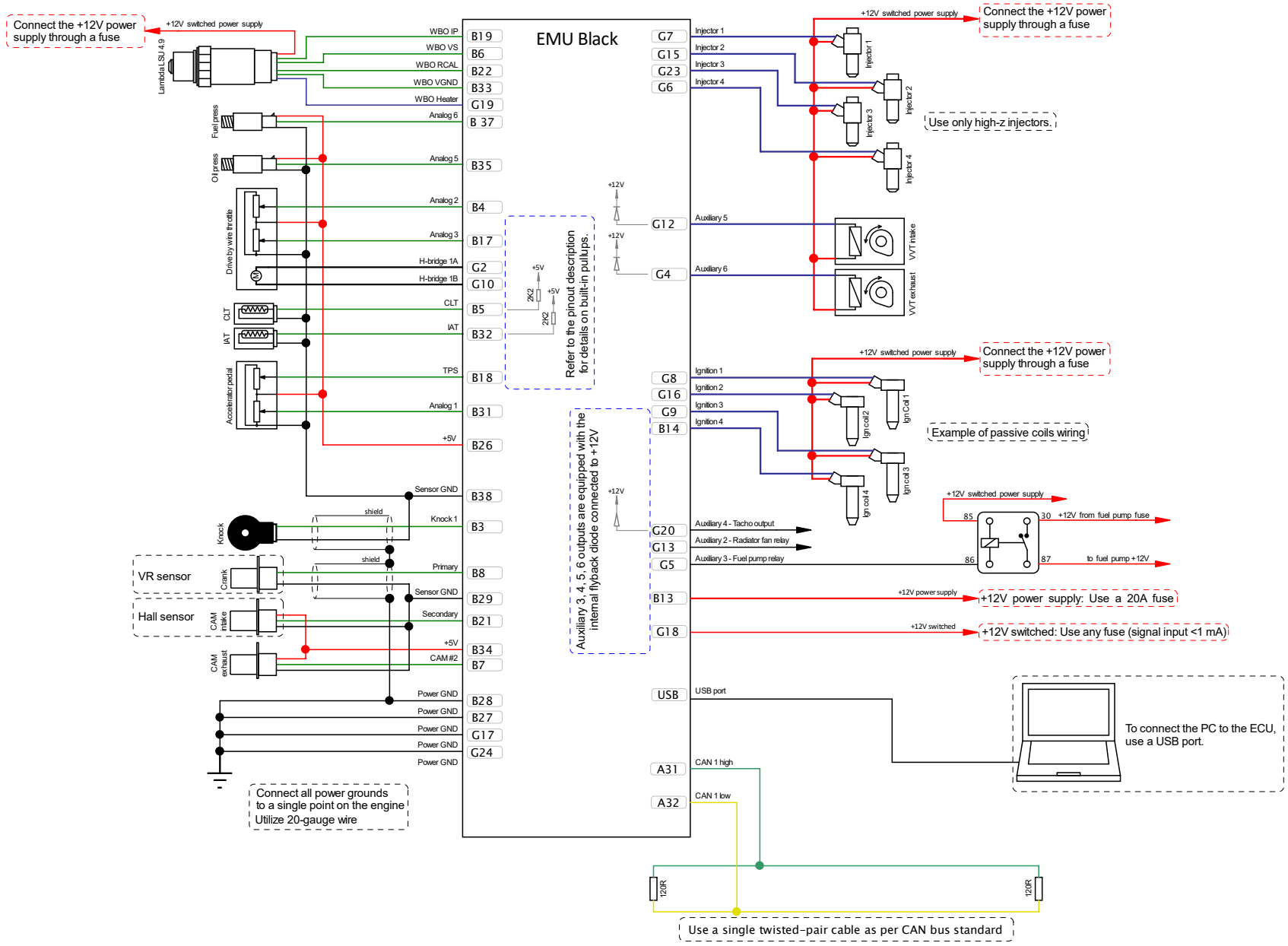

ver. 1.3

Copyright 2024 Ecumaster