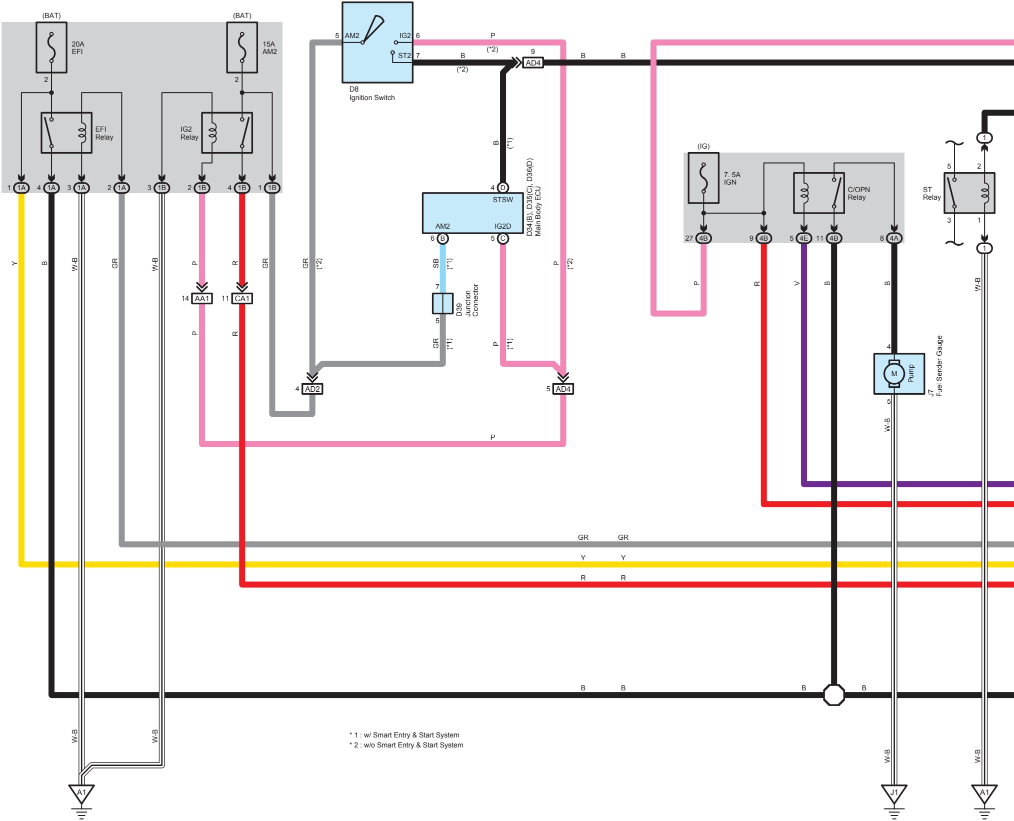
(BAT)
20A EFI
(BAT)
15A AM2
EFI Relay
IG2 Relay
1 1A
4 1A
3 1A
2 1A
3 1B
2 1B
4 1B
1 1B
Y
B
W-B
GR
W-B
P
R
GR
14 AA1
11 CA1
AM2
IG2
ST2
D8 Ignition Switch
P
(*2)
B
(*2)
9 AD4
B
B
(*1)
4 D
STSW
AM2
IG2D
6 B
5 C
D34(B), D35(C), D36(D) Main Body ECU
SB (*1)
7
D39 Junction Connector
5
GR (*1)
P (*1)
GR (*2)
P (*2)
4 AD2
5 AD4
P
(IG)
7.5A IGN
C/OPN Relay
27 4B
9 4B
5 4E
11 4B
8 4A
ST Relay
5
2
3
1
1
1
P
R
V
B
B
W-B
M
Pump
J7 Fuel Sender Gauge
4
5
W-B
GR GR
Y Y
R R
B B
B B
W-B
W-B
A1
J1
A1

* 1 : w/ Smart Entry & Start System
* 2 : w/o Smart Entry & Start System

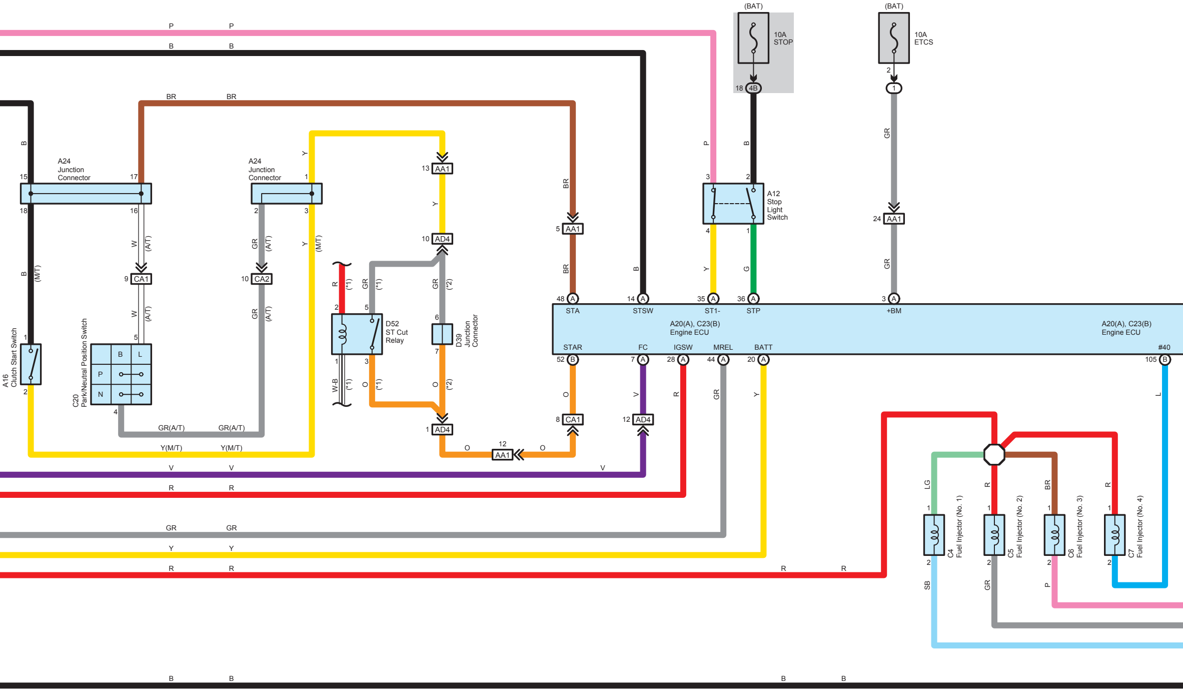
(BAT)
10A STOP
18 4B
(BAT)
10A ETCS
2
1
P P
B B
BR BR
A24 Junction Connector
15 17 18 16
A24 Junction Connector
1 2 3
13 AA1
10 AD4
5 AA1
A12 Stop Light Switch
3 2 4 1
24 AA1
9 CA1
10 CA2
W (A/T)
GR (A/T)
Y (M/T)
B (M/T)
R (*1)
GR (*1)
GR (*2)
D52 ST Cut Relay
2 5 1 3
D39 Junction Connector
6 7
W-B (*1)
O (*1)
O (*2)
A16 Clutch Start Switch
1 2
C20 Park/Neutral Position Switch
B L P N
5 4
GR(A/T) GR(A/T)
Y(M/T) Y(M/T)
1 AD4
12 AA1
O O
8 CA1
12 AD4
48 A STA
14 A STSW
35 A ST1-
36 A STP
3 A +BM
A20(A), C23(B) Engine ECU
A20(A), C23(B) Engine ECU
52 B STAR
7 A FC
28 A IGSW
44 A MREL
20 A BATT
105 B #40
V V V
R R
GR GR
Y Y
R R R R
B B B B
LG R BR R
C4 Fuel Injector (No. 1)
C5 Fuel Injector (No. 2)
C6 Fuel Injector (No. 3)
C7 Fuel Injector (No. 4)
1 2
SB GR P L

* 1 : w/ Smart Entry & Start System
* 2 : w/o Smart Entry & Start System

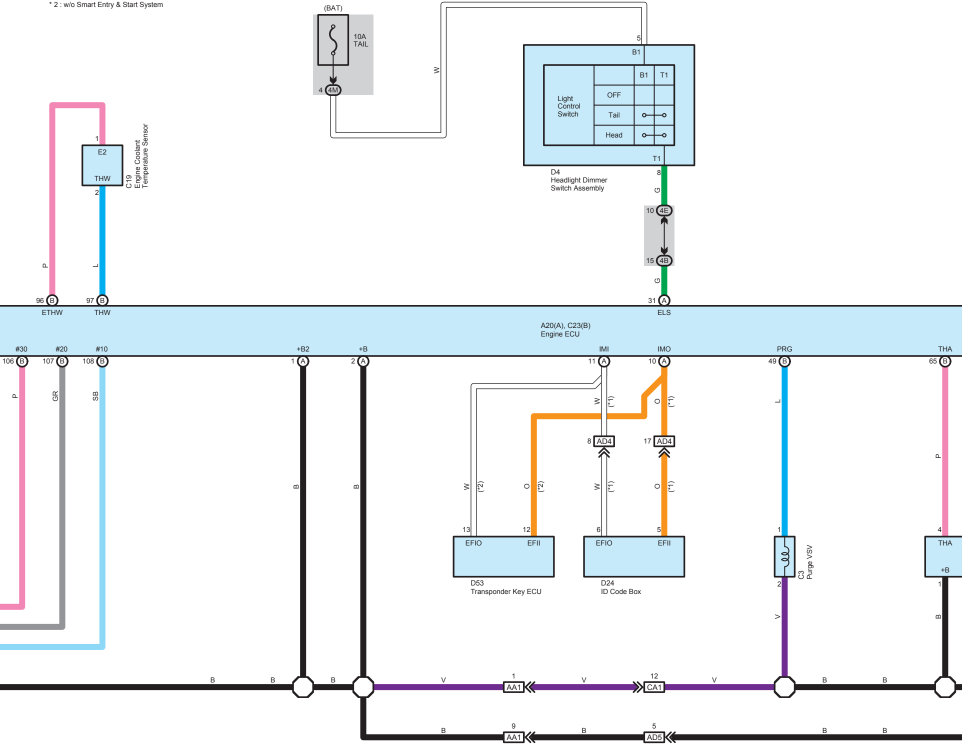
(BAT)
10A
TAIL
4 4M
W
5
B1
B1
T1
Light
Control
Switch
OFF
Tail
Head
T1
8
D4
Headlight Dimmer
Switch Assembly
G
10 4E
15 4B
G
31 A
ELS
1
E2
THW
2
C19
Engine Coolant
Temperature Sensor
P
L
96 B
ETHW
97 B
THW
A20(A), C23(B)
Engine ECU
#30
#20
#10
+B2
+B
IMI
IMO
PRG
THA
106 B
107 B
108 B
1 A
2 A
11 A
10 A
49 B
65 B
P
GR
SB
B
B
W
(*1)
O
(*1)
L
P
8 AD4
17 AD4
W
(*2)
O
(*2)
W
(*1)
O
(*1)
13
12
6
5
EFIO
EFII
EFIO
EFII
D53
Transponder Key ECU
D24
ID Code Box
1
2
C3
Purge VSV
V
4
THA
+B
1
B
B
B
B
V
1
AA1
V
12
CA1
V
B
B
B
9
AA1
B
5
AD5
B
B

* 1 : w/ Smart Entry & Start System
* 2 : w/o Smart Entry & Start System

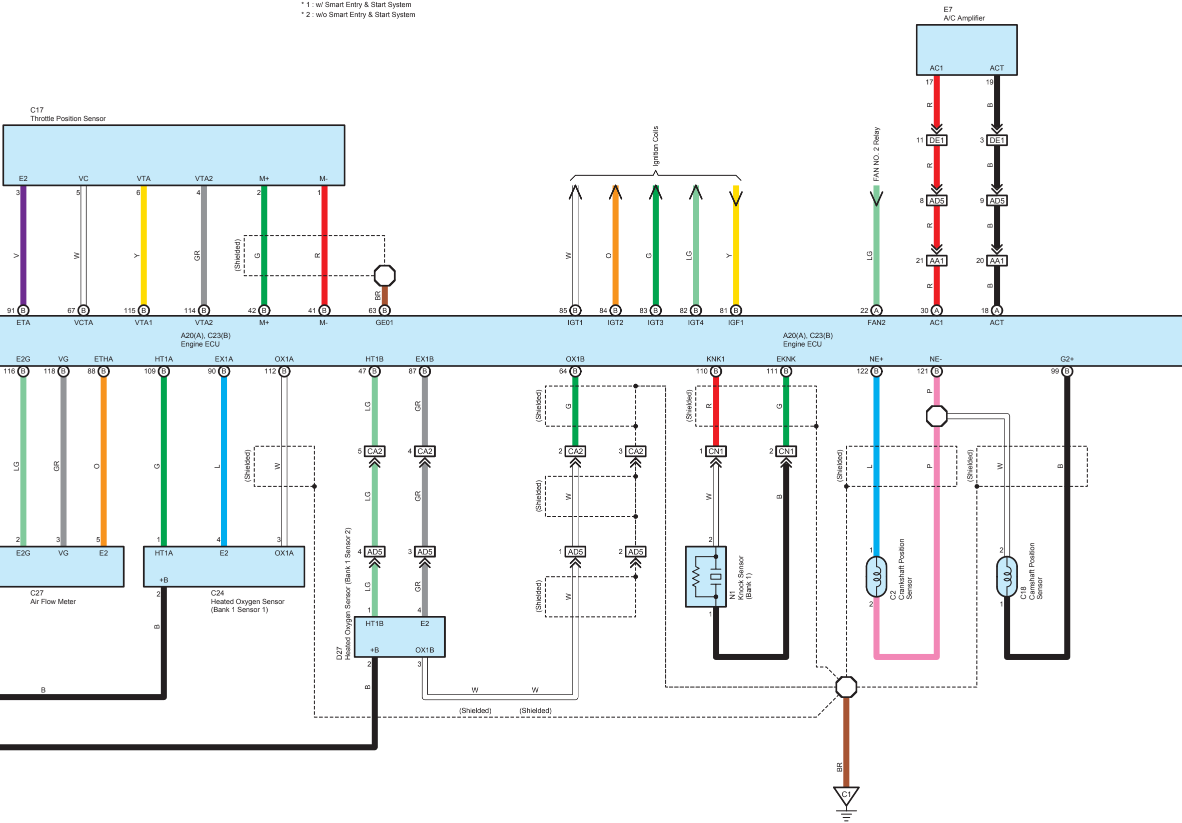

E7
A/C Amplifier
AC1
ACT
17
19
R
B
11 DE1
3 DE1
8 AD5
9 AD5
21 AA1
20 AA1
C17
Throttle Position Sensor
E2
VC
VTA
VTA2
M+
M-
3
5
6
4
2
1
V
W
Y
GR
(Shielded)
G
R
BR
Ignition Coils
FAN NO. 2 Relay
W
O
G
LG
Y
LG
91 B
67 B
115 B
114 B
42 B
41 B
63 B
85 B
84 B
83 B
82 B
81 B
22 A
30 A
18 A
ETA
VCTA
VTA1
VTA2
M+
M-
GE01
IGT1
IGT2
IGT3
IGT4
IGF1
FAN2
AC1
ACT
A20(A), C23(B)
Engine ECU
A20(A), C23(B)
Engine ECU
E2G
VG
ETHA
HT1A
EX1A
OX1A
HT1B
EX1B
OX1B
KNK1
EKNK
NE+
NE-
G2+
116 B
118 B
88 B
109 B
90 B
112 B
47 B
87 B
64 B
110 B
111 B
122 B
121 B
99 B
LG
GR
O
G
L
W
(Shielded)
LG
GR
G
R
G
P
L
P
W
B
5 CA2
4 CA2
2 CA2
3 CA2
1 CN1
2 CN1
4 AD5
3 AD5
1 AD5
2 AD5
W
B
2
3
5
1
4
3
E2G
VG
E2
HT1A
E2
OX1A
+B
C27
Air Flow Meter
C24
Heated Oxygen Sensor
(Bank 1 Sensor 1)
2
B
B
D27
Heated Oxygen Sensor (Bank 1 Sensor 2)
1
4
HT1B
E2
+B
OX1B
2
3
B
W
W
(Shielded)
(Shielded)
2
1
N1
Knock Sensor
(Bank 1)
1
2
C2
Crankshaft Position
Sensor
2
1
C18
Camshaft Position
Sensor
BR
C1

* 3 : w/ Engine Immobiliser System

* 1 : w/ Smart Entry & Start System
* 2 : w/o Smart Entry & Start System

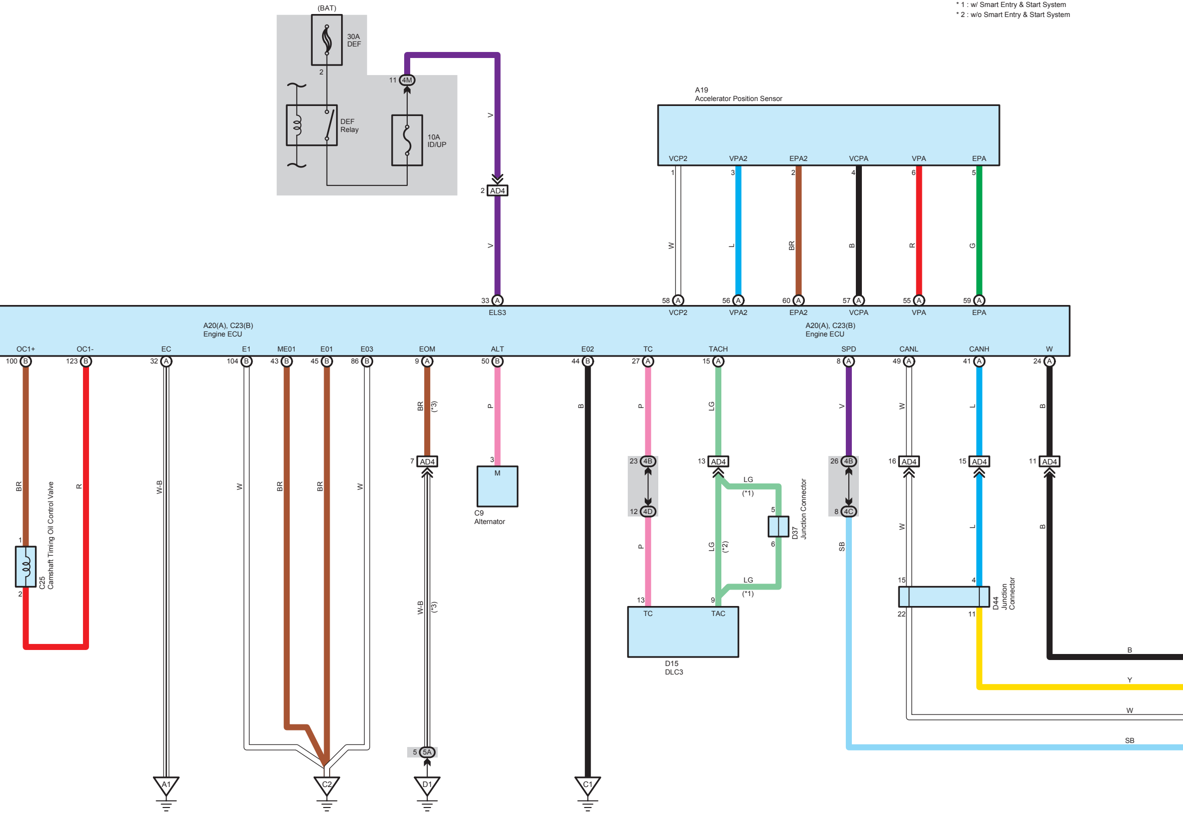
(BAT)
30A
DEF
2
DEF
Relay
10A
ID/UP
11
4M
V
2
AD4
V
33
A
ELS3
A19
Accelerator Position Sensor
VCP2
VPA2
EPA2
VCPA
VPA
EPA
1
3
2
4
6
5
W
L
BR
B
R
G
58
A
56
A
60
A
57
A
55
A
59
A
VCP2
VPA2
EPA2
VCPA
VPA
EPA
A20(A), C23(B)
Engine ECU
A20(A), C23(B)
Engine ECU
OC1+
OC1-
EC
E1
ME01
E01
E03
EOM
ALT
E02
TC
TACH
SPD
CANL
CANH
W
100
B
123
B
32
A
104
B
43
B
45
B
86
B
9
A
50
B
44
B
27
A
15
A
8
A
49
A
41
A
24
A
BR
R
W-B
W
BR
BR
W
BR
(*3)
P
B
P
LG
V
W
L
B
1
C25
Camshaft Timing Oil Control Valve
2
7
AD4
3
M
C9
Alternator
23
4B
12
4D
P
13
AD4
LG
(*1)
5
6
D37
Junction Connector
LG
(*2)
LG
(*1)
13
9
TC
TAC
D15
DLC3
26
4B
8
4C
SB
16
AD4
15
AD4
11
AD4
W
L
B
15
4
22
11
D44
Junction
Connector
B
Y
W
SB
W-B
(*3)
5
5A
A1
C2
D1
C1

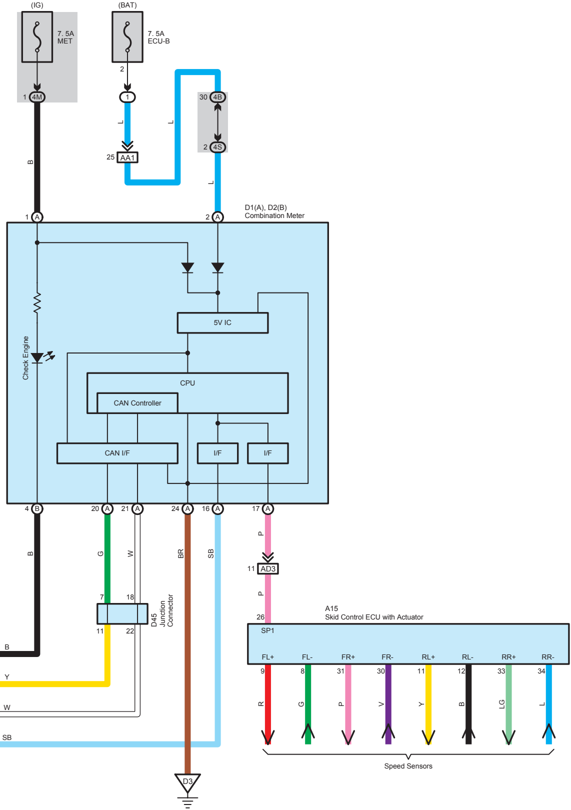
(IG)
7. 5A
MET
(BAT)
7. 5A
ECU-B
2
1
4M
1
L
25
AA1
L
30
4B
2
4S
L
B
1
A
2
A
D1(A), D2(B)
Combination Meter
Check Engine
5V IC
CPU
CAN Controller
CAN I/F
I/F
I/F
4
B
20
A
21
A
24
A
16
A
17
A
B
G
W
BR
SB
P
11
AD3
P
7
18
11
22
D45
Junction
Connector
26
A15
Skid Control ECU with Actuator
SP1
FL+
FL-
FR+
FR-
RL+
RL-
RR+
RR-
9
8
31
30
11
12
33
34
R
G
P
V
Y
B
LG
L
B
Y
W
SB
D3
Speed Sensors